DK series

Dimensions

DK1 tab terminal type (directly attached)

Unit: mm

TOLERANCES
＜5mm: ±0.2
≧5mm: ±0.3

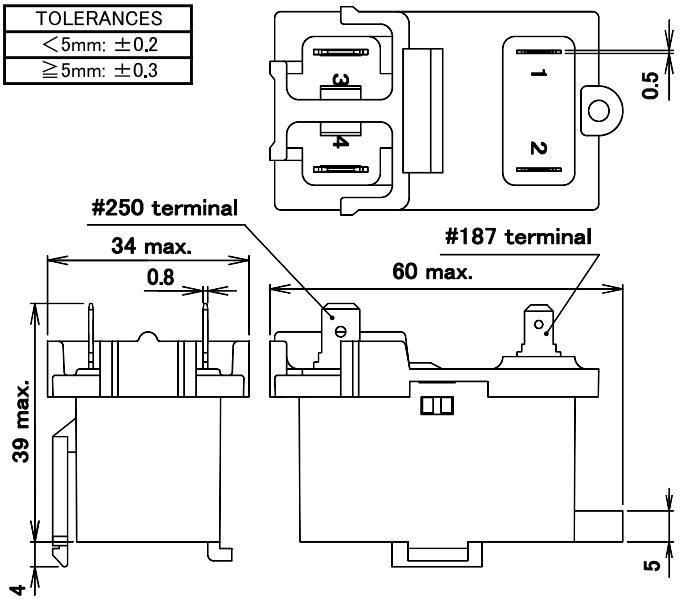

Schematics

DK1 tab terminal type (directly attached)

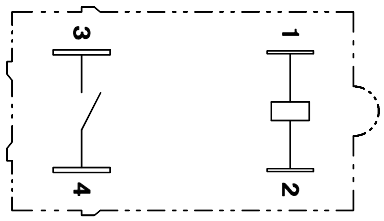

Mounting holes of panel or chassis (case) (tolerance ±0.2mm)
Recommended plate thickness 0.4 to 0.8mm

DK1 tab terminal type (directly attached)

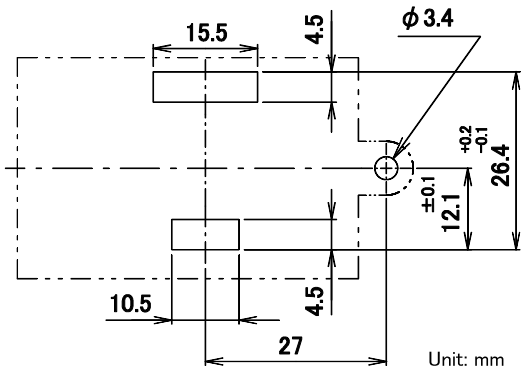

Unit: mm

Dimensions

DK1 PCB terminal type

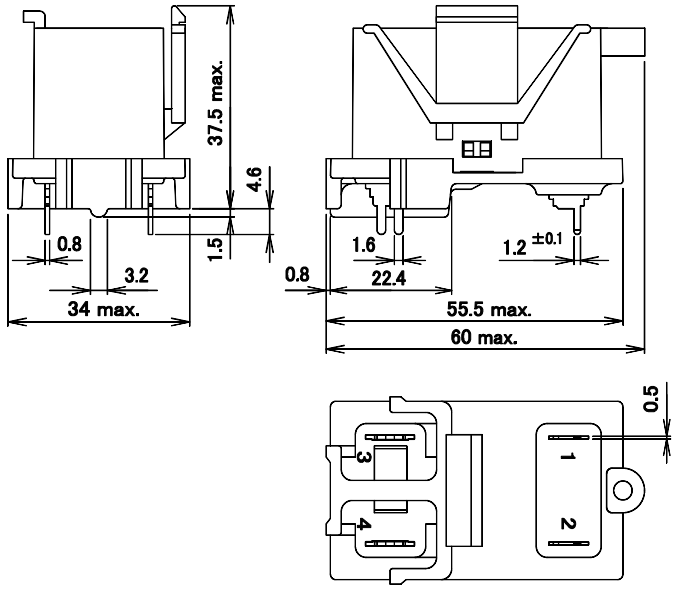

Unit: mm

TOLERANCES
＜5mm: ±0.2
≧5mm: ±0.3

Schematics

DK1 PCB terminal type

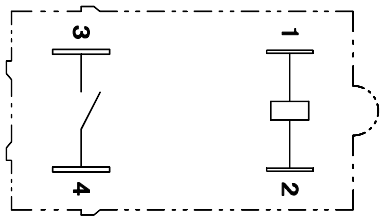

PCB mounting holes

DK1 PCB terminal type
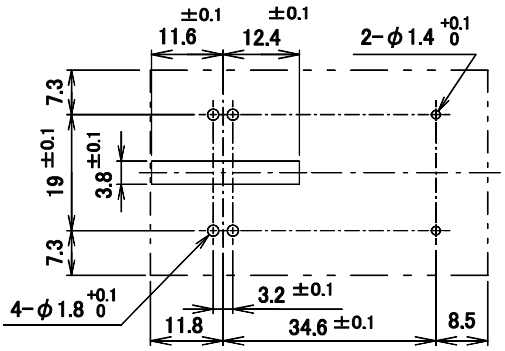
Unit: mm