DH series

Dimensions

Unit: mm

TOLERANCES
＜5mm: ±0.2
≧5mm: ±0.3

DH2TU

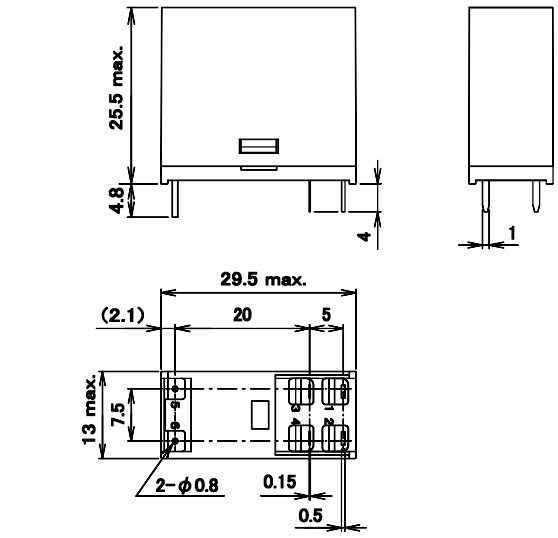

DH2U

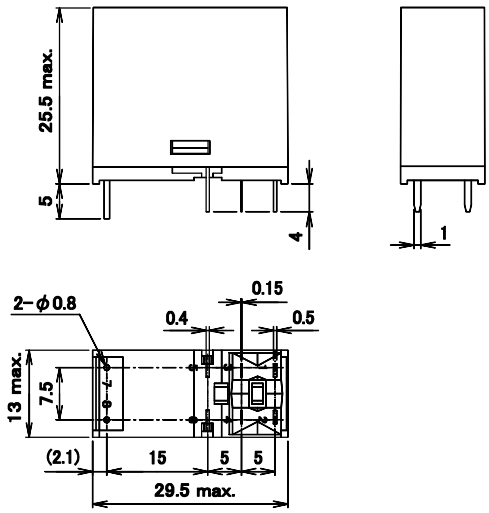

DH1FU (1a)

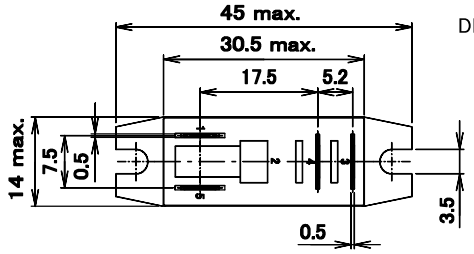
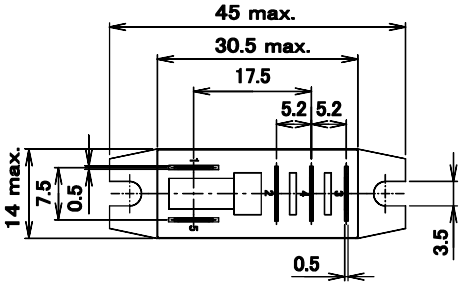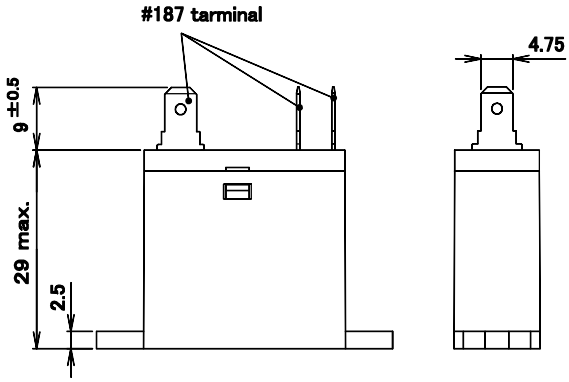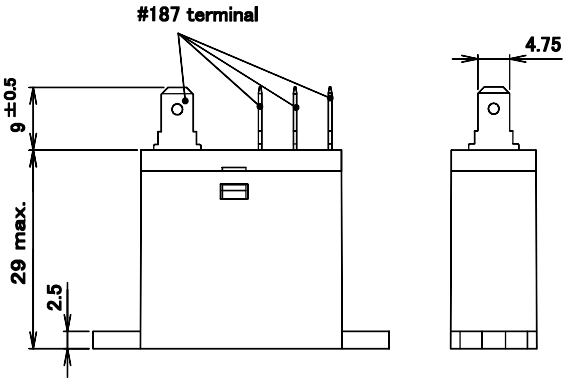
DH1FU (1c)